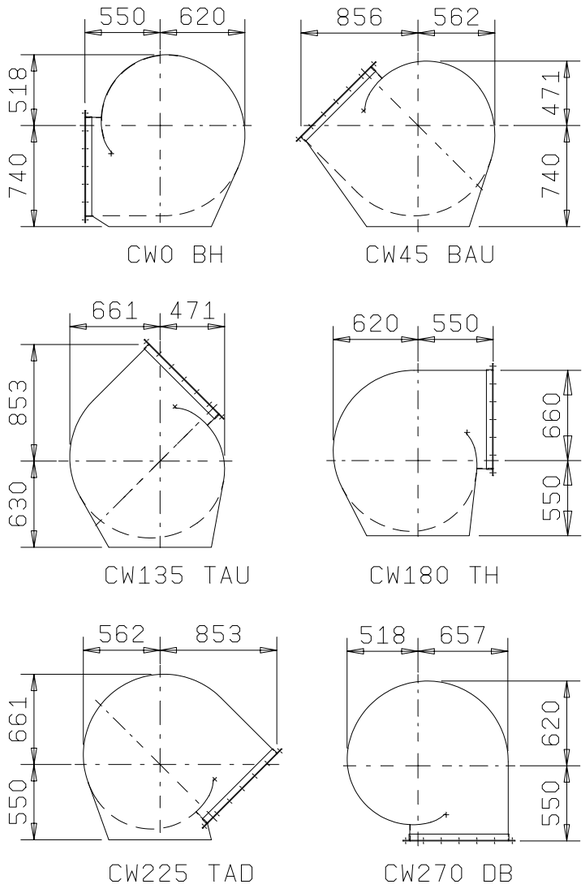

VIEW FROM DRIVE END

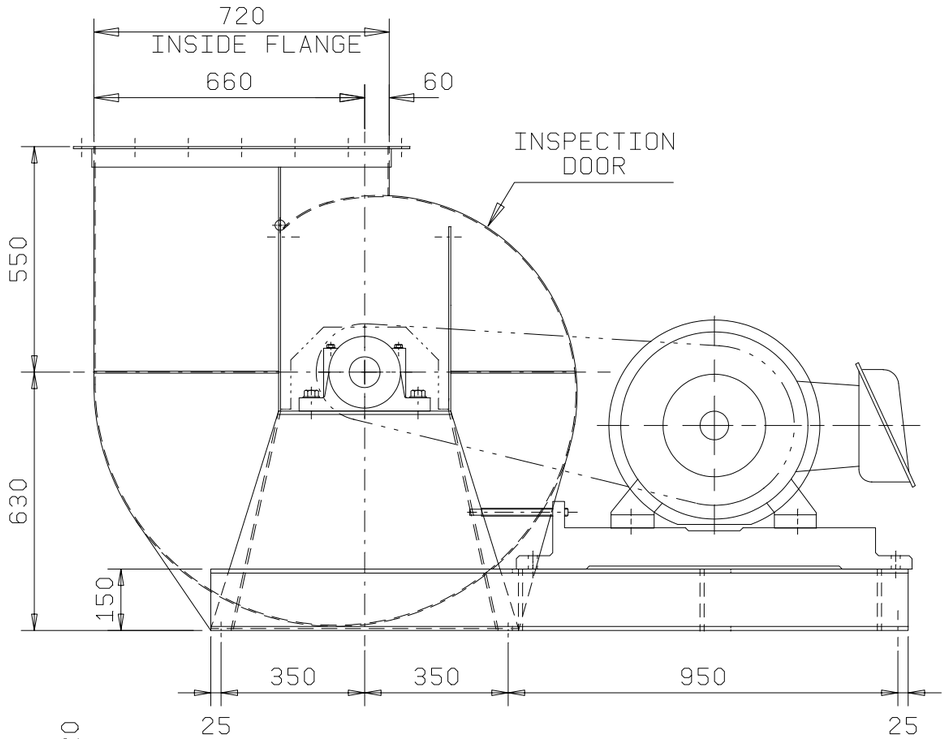

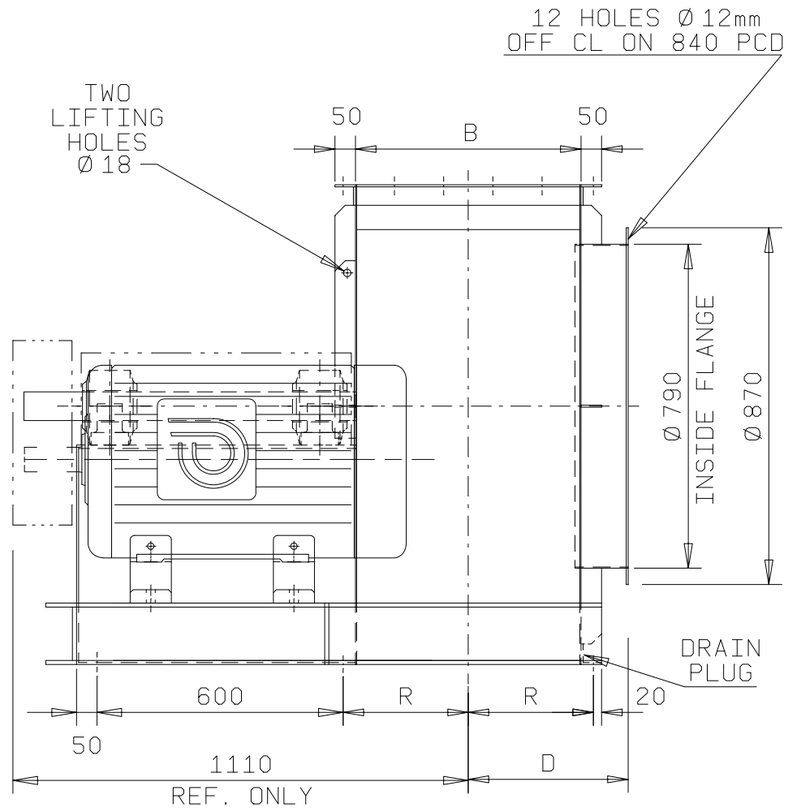

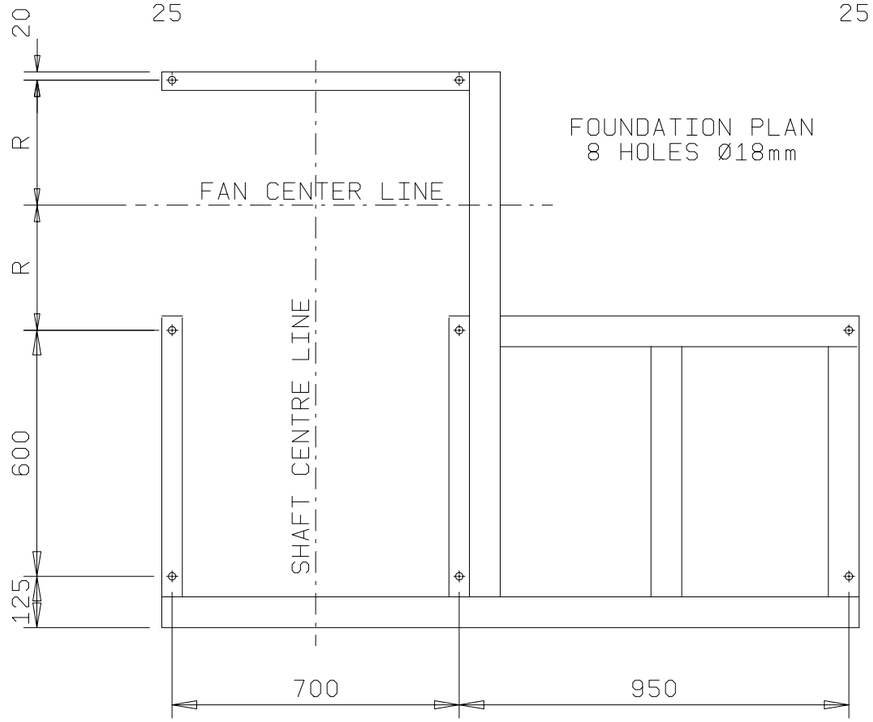

FOUNDATION PLAN
8 HOLES Ø18mm

CASING % WIDTH	B	D	I	R
40	450	340	65	255
60	480	355	90	270
80	510	370	105	285
100	550	390	125	305
120	590	410	145	325

SUITS ALL MOTOR FRAMES TO D250M

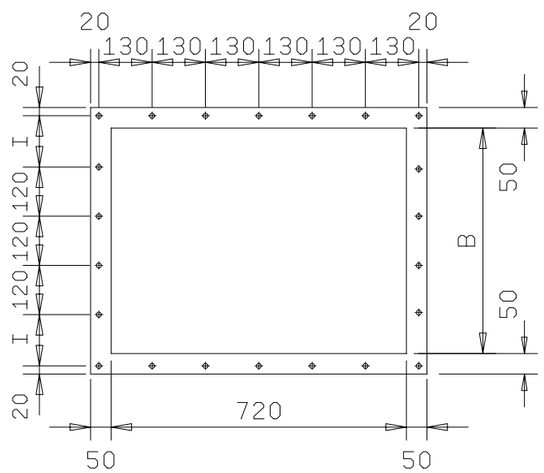

DISCHARGE FLANGE DETAIL
22 HOLES Ø12mm

DO NOT SCALE

THIS DRAWING, DESIGNS AND CONCEPTS IS THE SOLE PROPERTY OF AIRENG PTY. LTD. AND IS TO BE RETURNED ON REQUEST. IT IS TO BE TREATED AS CONFIDENTIAL AND NOT TO BE COPIED OR COMMUNICATED TO ANY OTHER PERSON WITHOUT THE WRITTEN CONSENT OF AIRENG PTY. LTD.. IT MAY ONLY BE USED FOR MANUFACTURE WHEN ACCOMPANIED BY A WRITTEN ORDER.

REV.	DATE	MODIFICATION	SIGN.
A	18/05/00	foundation holes were Ø20 now Ø18	SJR

DRAFTING STANDARD AS1100-1984

CAD FILE No.

QIKDRAW

AIRENG PTY. LTD.
BAYSWATER VICTORIA AUSTRALIA
Ph. (613) 9761 3333 Fax (613) 9761 0550
ACN 060 583 164

DRAWN: VTG
DATE: 09-02-98
CHECKED:
DATE:
REV. No. A

TITLE: GENERAL ASSEMBLY
D.5000 S.2700 ARR.1/W CW90

SUITS FRAME SIZE D100L TO D250M

SCALE | DRAWING NO. QC D5000 S2700 G-C1W | A3